FLORIDA PRODUCT APPROVAL #331

GENERAL NOTES: SERIES FD5555 LARGE & SMALL MISSILE IMPACT-RESISTANT, VINYL, REINFORCED, OUTSWING FRENCH DOOR & SIDELITE/TRANSOM (SLT/TR)

IMPACT RATING
RATED FOR LARGE & SMALL MISSILE IMPACT RESISTANCE MISSILE LEVEL D, WINDZONE 4

DESIGN PRESSURE RATING
VARIES, SEE SHEETS 4 & 5

1) THIS PRODUCT HAS BEEN DESIGNED & TESTED TO COMPLY WITH THE REQUIREMENTS OF THE FLORIDA BUILDING CODE.

2) SHUTTERS ARE NOT REQUIRED WHEN USED IN WIND-BORNE DEBRIS REGIONS.

3) MATERIALS USED FOR ANCHOR EVALUATIONS WERE SOUTHERN PINE, ASTM C90 CONCRETE MASONRY UNITS AND CONCRETE WITH MIN. KSI PER ANCHOR TYPE.

4) MASONRY ANCHORS MAY BE USED INTO WOOD AS PER TABLE 1, THIS SHEET. ALL WOOD BUCKS LESS THAN 1-1/2" THICK ARE TO BE CONSIDERED 1X INSTALLATIONS. 1X WOOD BUCKS ARE OPTIONAL IF UNIT IS INSTALLED DIRECTLY TO SUBSTRATE. WOOD BUCKS DEPICTED AS 2X ARE 1-1/2" THICK OR GREATER. 1X AND 2X BUCKS (WHEN USED) SHALL BE DESIGNED TO PROPERLY TRANSFER LOADS TO THE STRUCTURE. WOOD BUCK DESIGN AND INSTALLATION IS THE RESPONSIBILITY OF THE ENGINEER OR ARCHITECT OF RECORD.

5) IF SILL IS TIGHT TO SUBSTRATE, GROUT IS NOT REQUIRED. IF USED, NON-SHRINK, NON-METALLIC GROUT, 3400 PSI MIN., (DONE BY OTHERS) (MAX. 1/4" SHIM SPACE FOR GROUT) MUST FULLY SUPPORT THE ENTIRE LENGTH OF THE SILL THAT IS NOT TIGHT TO THE SUBSTRATE, AND TRANSFER SHEAR LOAD TO SUBSTRATE. IF SUBSTRATE IS WOOD, 30# FELT PAPER OR MASTIC IS REQUIRED BETWEEN THE GROUT AND WOOD SUBSTRATE, OR AS APPROVED BY THE AUTHORITY HAVING JURISDICTION, COMPLYING WITH THE FBC.

6) ANCHOR EMBEDMENT TO BASE MATERIAL SHALL BE BEYOND WALL DRESSING OR STUCCO. USE ANCHORS OF SUFFICIENT LENGTH TO ACHIEVE THE EMBEDMENT SHOWN ON TABLE 1, THIS SHEET. NARROW JOINT SEALANT IS USED ON ALL FOUR CORNERS OF THE FRAME. EXTERIOR INSTALLATION ANCHORS SHOULD BE SEALED. OVERALL SEALING/FLASHING STRATEGY FOR WATER RESISTANCE OF INSTALLATION SHALL BE DONE BY OTHERS AND IS BEYOND THE SCOPE OF THESE INSTRUCTIONS.

7) SHIMS ARE REQUIRED AT EACH ANCHOR LOCATION WHERE THE PRODUCT IS NOT FLUSH TO THE SUBSTRATE. USE SHIMS CAPABLE OF TRANSFERRING APPLIED LOADS. WOOD BUCKS, BY OTHERS, MUST BE SUFFICIENTLY ANCHORED TO RESIST LOADS IMPOSED ON THEM BY THE DOOR, SIDELITE OR TRANSOM.

8) DESIGN PRESSURES:
A. NEGATIVE DESIGN LOADS BASED ON STRUCTURAL TEST PRESSURE, FRAME ANALYSIS AND GLASS PER ASTM E1300.
B. POSITIVE DESIGN LOADS BASED ON WATER TEST PRESSURE, STRUCTURAL TEST PRESSURE, FRAME ANALYSIS AND GLASS PER ASTM E1300.

8) THE ANCHORAGE METHODS SHOWN HAVE BEEN DESIGNED TO RESIST THE WINDLOADS CORRESPONDING TO THE REQUIRED DESIGN PRESSURE. THE 33-1/3% STRESS INCREASE HAS NOT BEEN USED IN THE DESIGN OF THIS PRODUCT. THE 1.6 LOAD DURATION FACTOR WAS USED FOR THE EVALUATION OF ANCHORS INTO WOOD. ANCHORS THAT COME INTO CONTACT WITH OTHER DISSIMILAR MATERIALS SHALL MEET THE REQUIREMENTS OF THE FLORIDA BUILDING CODE FOR CORROSION RESISTANCE.

9) ALL RIGID AND CELLULAR PVC MANUFACTURED BY ENERGI FENESTRATION SOLUTIONS USA, INC. OR VISION EXTRUSION, LTD. HAS BEEN TESTED TO COMPLY WITH THE FLORIDA BUILDING CODE FOR PLASTICS.

10) SIZES MUST BE VERIFIED FOR COMPLIANCE WITH EGRESS REQUIREMENTS PER THE FLORIDA BUILDING CODE.

11) REFERENCES: TEST REPORTS FTL-7393, 7396, 7402, 7403, 7404 & 7418.

TABLE 1:

Group	Anchor	Substrate	Min. Edge Distance	Min. Embedment
A	3/16" Ultracon+	Concrete (min. 3 ksi)	1-1/8"	1-3/4"
		Ungrouted CMU, (ASTM C-90)	1"	1-1/4"
B	#10 Steel SMS (G5) #10 410 S.S. SMS #10 18-8 S.S. SMS	P.T. Southern Pine (SG=0.55)	1/2"	1-3/8"
		Aluminum, 6063-T5*	5/16"	0.063"
		Steel, A36*	5/16"	0.063"
		Steel Stud, A653 Gr. 33*	5/16"	0.063"
	3/16" Ultracon+	P.T. Southern Pine (SG=0.55)	1/2"	1-3/8"
		Ungrouted CMU, (ASTM C-90)	2-1/2"	1-1/4"
		Concrete (min. 3 ksi)	1-1/8"	1-3/4"
	1/4" Ultracon+	Ungrouted CMU, (ASTM C-90)	1-1/16"	1-1/4"
C	#12 Steel SMS (G5) #12 410 S.S. SMS #12 18-8 S.S. SMS	P.T. Southern Pine (SG=0.55)	9/16"	1-3/8"
		Aluminum, 6063-T5*	3/8"	0.071"
		Steel, A36*	3/8"	0.071"
		Steel Stud, A653 Gr. 33*	3/8"	0.071" (14 Ga)
	1/4" Ultracon+	P.T. Southern Pine (SG=0.55)	1"	1-3/8"
		Grouted CMU, (ASTM C-90)	1-1/8"	1-3/4"
		Concrete (min. 3 ksi)	1-1/4"	1-3/8"
	1/4" 410 S.S. CreteFlex	Concrete (min. 3.35 ksi)	1"	1-3/4"
		Ungrouted CMU, (ASTM C-90)	2-1/2"	1-1/4"
	1/4" 18-8 S.S. Aggre-Gator	P.T. Southern Pine (SG=0.55)	1"	1-3/8"
		Concrete (min. 3.27 ksi)	1-1/2"	1-3/8"
		Ungrouted CMU, (ASTM C-90)	4"	1-1/4"
D	1/4" Ultracon+	Concrete (min. 3 ksi)	2-1/2"	1-3/8"
	1/4" 410 S.S. CreteFlex	Concrete (min. 3.35 ksi)	2-1/2"	1-3/4"

1) * MIN. OF 3 THREADS BEYOND THE METAL SUBSTRATE.
2) UNGROUTED CMU VALUES MAY BE USED FOR GROUTED CMU APPLICATIONS.
3) ALL ANCHOR HEAD TYPES ARE ACCEPTABLE.

TABLE A:

Product	Size	DP	Product Rating
Mullion	96"	+/-70 psf	DP +/-70
Door	38-3/4" x 96" (X) 76" x 96" (XX)	+/-50 psf *	R-PG70
Door	38-3/4" x 96" (X) 76" x 96" (XX)	+/-70 psf	R-PG70
Sidelite or Transom	40" x 111" 111" x 40"	+/-70 psf	R-PG70

* IMPACT/CYCLE DESIGN PRESSURE IS LIMITED FOR UNITS USING GLASS TYPE 1.

TABLE 2:

Type #	Description	Where Used:
1	1-3/16" Lami. IG (1/8" T - 11/16" Air - 1/8" An - .090" PVB - 1/8" An)	Door
2	1-3/16" Lami. IG (3/16" T - 5/8" Air - 1/8" An - .090" PVB - 1/8" An)	
3	1-3/16" Lami. IG (1/8" T - 9/16" Air - 3/16" An - .090" SG - 3/16" An)	Sidelite & Transom (SLT/TR)
4	1-3/16" Lami. IG (3/16" T - 1/2" Air - 3/16" An - .090" SG - 3/16" An)	
5	1-3/16" Lami. IG (1/8" T - 9/16" Air - 3/16" An - .090" PVB - 3/16" An)	
6	1-3/16" Lami. IG (3/16" T - 1/2" Air - 3/16" An - .090" PVB - 3/16" An)	

"PVB" = .090" TROSIFOL® PVB INTERLAYER BY KURARAY AMERICA, INC.
"SG" = .090" SENTRYGLAS® INTERLAYER BY KURARAY AMERICA, INC.

GUIDE TO SHEETS:

GENERAL NOTES.....1
ELEVATIONS.....2
GLAZING DETAILS.....3
DESIGN PRESSURES.....4-5
SIDELITE/TRANSOM ANCHORS....4-5
INSTALLATION.....6-8
EXTRUSION PROFILES.....9
PARTS LIST.....10
CORNER DETAILS.....10
HARDWARE DETAILS.....11

Revision: E) REMOVE 1/4" & 3/16" ULTRACON

PREPARED BY A. LYNN MILLER
1070 TECHNOLOGY DRIVE
N. VENICE, FL 34275
(941) 480-1600
REGISTRATION #29296

Date 06/12/11
Drawn By A. MORLESIN
Rev. D

PGT Custom Windows and Doors
1070 TECHNOLOGY DRIVE
N. VENICE, FL 34275
(941) 480-1600

Title VINYL FRENCH DOOR (LM)
Desc. GENERAL NOTES.
DWG No. FD5555FPA-LM
Sheet 1 OF 11
Series FD5555

ANTHONY LYNN MILLER
LICENSE
No. 58705
STATE OF FLORIDA
PROFESSIONAL ENGINEER
10/11/23

A. LYNN MILLER, P.E.
P.E.# 58705

EXAMPLE CONFIGURATIONS

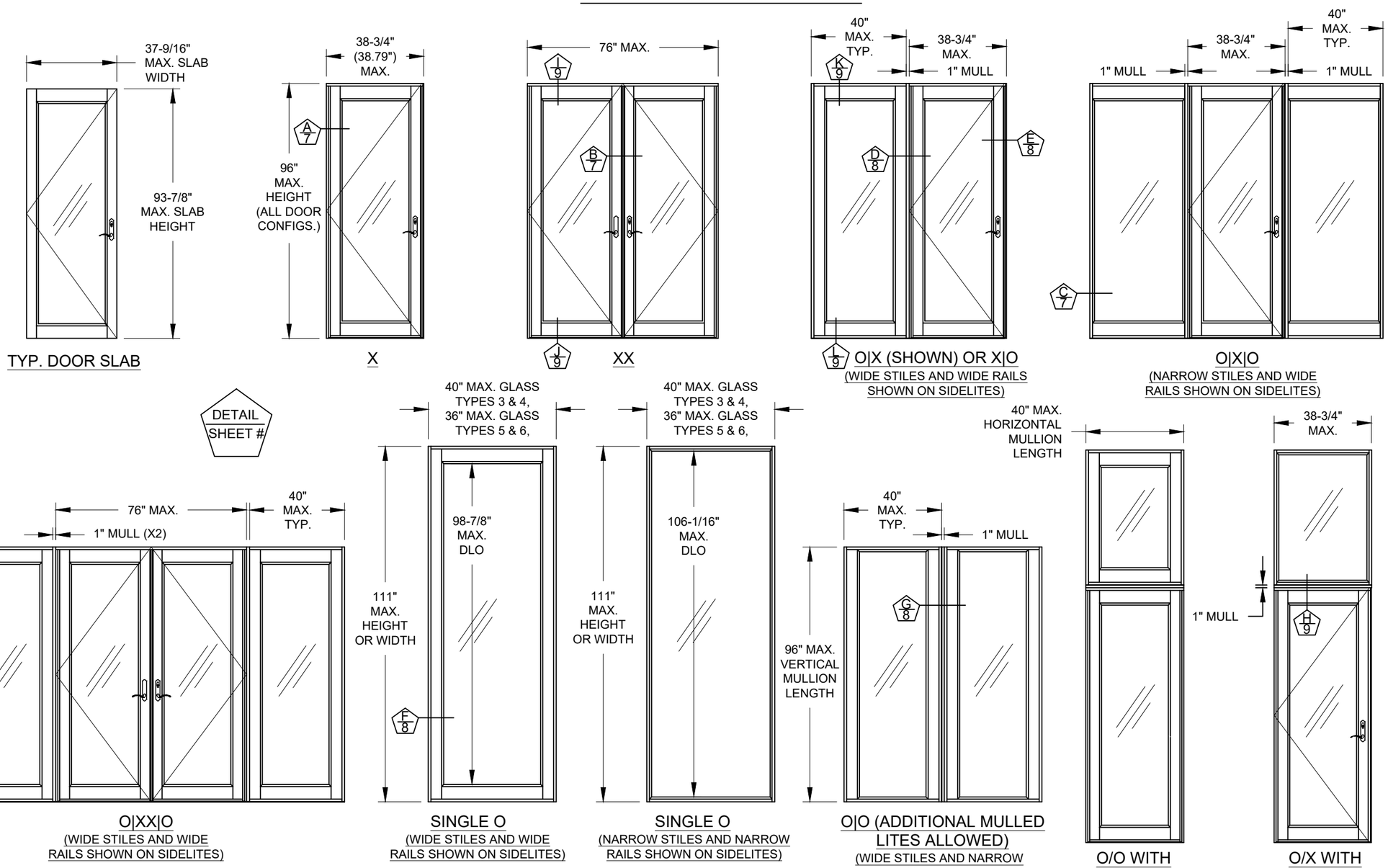

NOTES:
1) SINGLE DOORS MAY BE LEFT OR RIGHT-HANDED.
2) MULLIONS SHOWN ARE STANDARD 1" FRENCH DOOR MULLIONS PER THIS APPROVAL.
3) MULLED CONFIGURATIONS NOT SHOWN MAY BE POSSIBLE USING OTHER MULLION TYPES, SEE SEPARATE APPROVAL.
4) FRENCH DOOR MULLION IS LIMITED TO 96" IN VERTICAL APPLICATIONS AND 40" IN HORIZONTAL APPLICATIONS.
5) NARROW OR WIDE STILES AND RAILS MAY BE MIXED WITHIN THE SAME SLT/TR OR MULLED ASSEMBLY.
6) ADDITIONAL CONFIGURATIONS USING THE 1" FRENCH DOOR MULLION ARE POSSIBLE. USE THE ABOVE DRAWINGS AS A REFERENCE FOR SIZE LIMITATIONS.

Revision:
E) NO CHANGES IN THIS SHEET.

PREPARED BY A. LYNN MILLER
1070 TECHNOLOGY DRIVE
N. VENICE, FL 34275
(941) 480-1600
REGISTRATION #29296

PGT Custom Windows and Doors
1070 TECHNOLOGY DRIVE
N. VENICE, FL 34275
(941) 480-1600

Series	Sheet	DWG No.	Drawn By	Date	Rev.
FD5555	2 OF 11	FD5555FPA-LM	A. MORLESIN	06/12/11	D

Title: VINYL FRENCH DOOR (LM)
Desc.: EXAMPLES CONFIGURATIONS.

ANTHONY LYNN MILLER
LICENSE
No. 58705
STATE OF FLORIDA
PROFESSIONAL ENGINEER
10/11/23

A. LYNN MILLER, P.E.
P.E.# 58705

DOOR GLAZING DETAILS

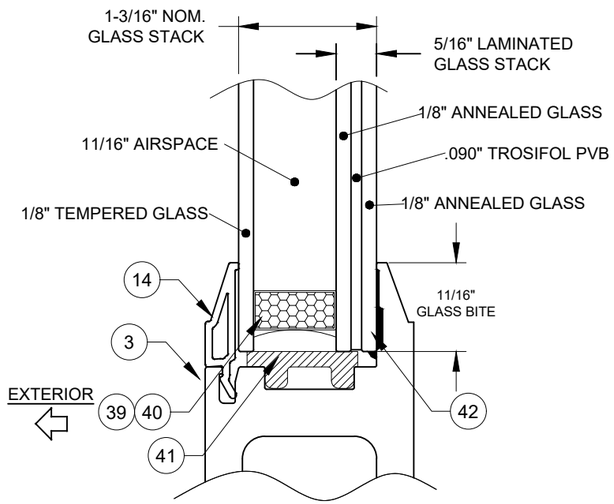

GLASS TYPE 1

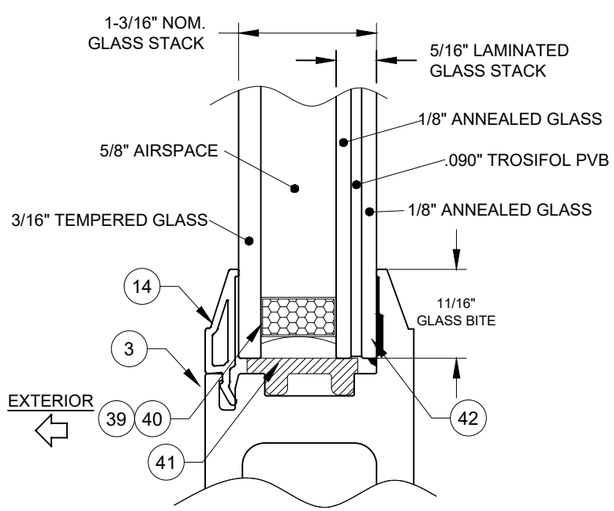

GLASS TYPE 2

SIDELITE & TRANSOM GLAZING DETAILS

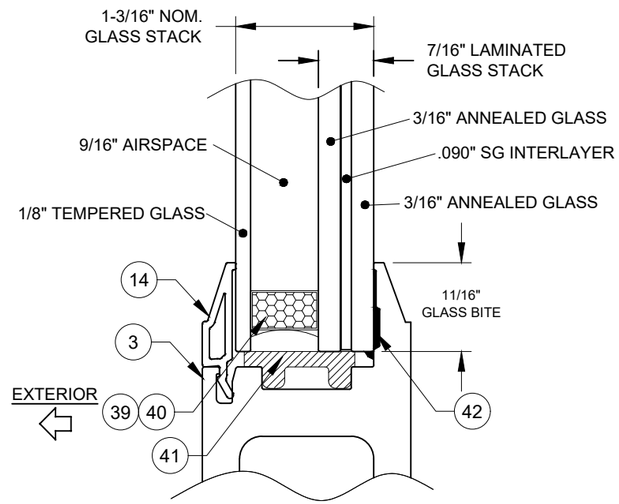

GLASS TYPE 3

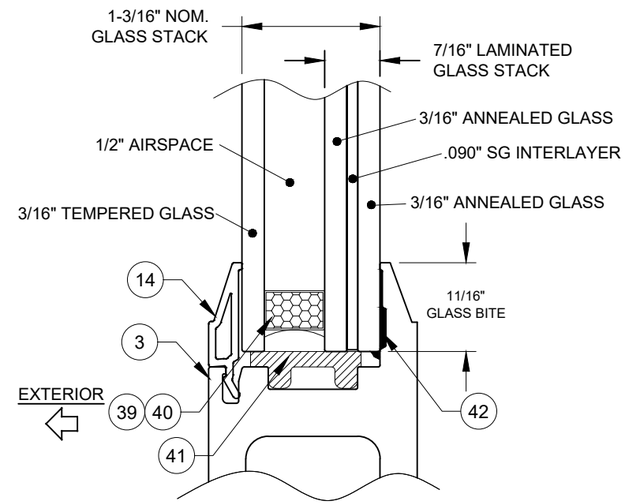

GLASS TYPE 4

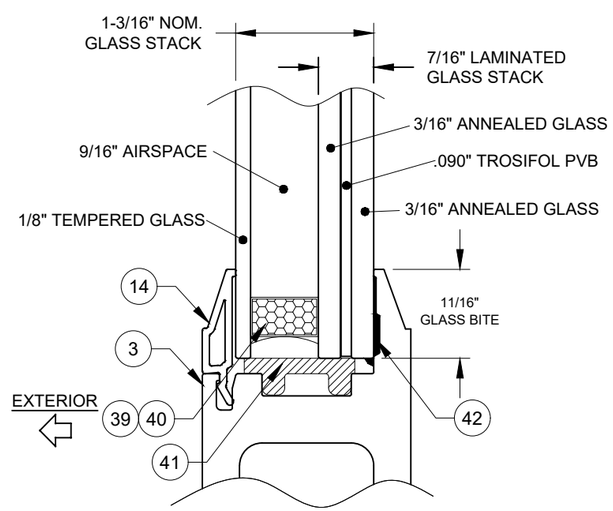

GLASS TYPE 5

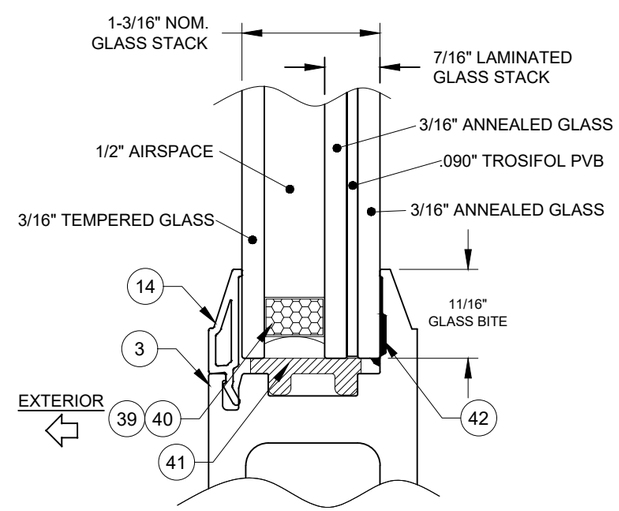

GLASS TYPE 6

TROSIFOL PVB & SENTRYGLAS (SG) INTERLAYERS MANUFACTURED BY KURARAY AMERICA, INC.

Revision:

E) NO CHANGES IN THIS SHEET.

PREPARED BY A. LYNN MILLER
1070 TECHNOLOGY DRIVE
N. VENICE, FL 34275
(941) 480-1600

REGISTRATION #29296

PGT Custom Windows and Doors
1070 TECHNOLOGY DRIVE
N. VENICE, FL 34275
(941) 480-1600

Series	Sheet	DWG No.	Rev.
FD5555	3 OF 11	FD5555FPA-LM	D

Desc.	Drawn By	Date
GLASS TYPES.	A. MORLESIN	06/12/11

Title: VINYL FRENCH DOOR (LM)

ANTHONY LYNN MILLER
LICENSE
No. 58705
A. Lynn Miller
10/11/23
STATE OF FLORIDA
PROFESSIONAL ENGINEER

A. LYNN MILLER, P.E.
P.E.# 58705

SINGLE DOOR INSTALLATION (X)

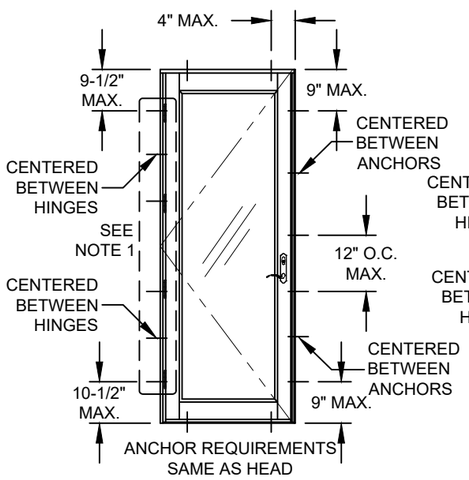

X

TABLE 3:

DOOR DESIGN PRESSURE	
+/-50.0 PSF	Glass Type 1
+/-70.0 PSF	Glass Type 2

DOUBLE DOOR INSTALLATION (XX)

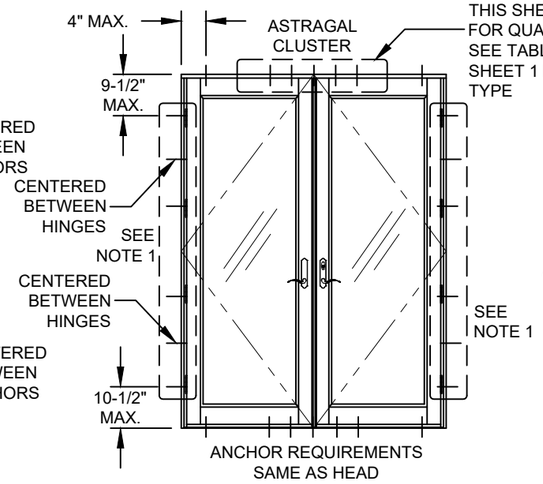

XX, (USING ASTRAGAL)

TABLE 4:

XX Door: Astragal Cluster Anchors Required @ Head & Sill								
	Door Width (in)							
	48	60		72		76		
Door Height (in)	Anchor Group A-D	Anchor Group A&B	Anchor Group C&D	Anchor Group A&B	Anchor Group C&D	Anchor Group A&B	Anchor Group C	Anchor Group D
80	4	4	4	5	4	5	4	4
96	4	5	4	6	4	6	5	4

SIDELITE-TO-SIDELITE MULLION INSTALLATION (O|O, O|O|O, ETC.)

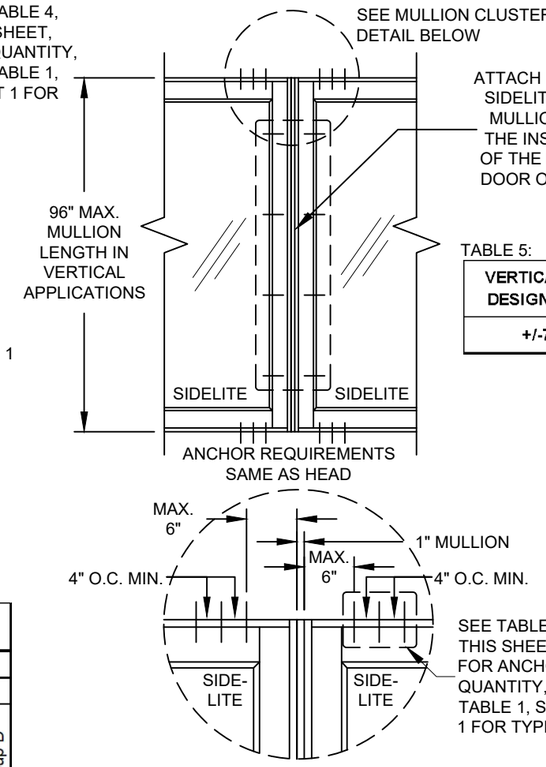

TABLE 5:

VERTICAL MULLION DESIGN PRESSURE
+/-70.0 PSF

SIDELITE-TO-DOOR MULLION INSTALLATION (X|O, O|X, X|X, O|X|O, X|O|X, O|XX|O, ETC)

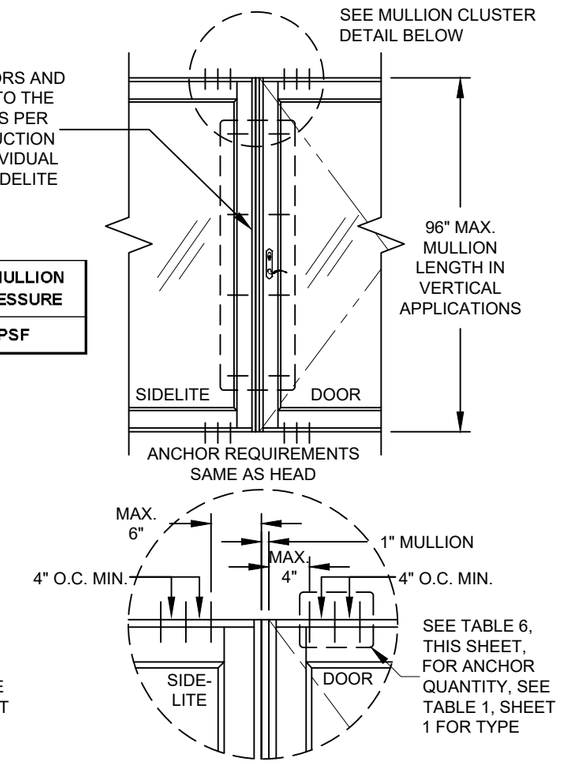

TABLE 6:

Anchors Required for a Vertical Mullion (each mullion end)												
		Door or Sidelite/Transom Width (in)										
		12	24		32			38-3/4			40		
	Mullion Height (in)	Anchor Group A-D	Anchor Group A-C	Anchor Group D	Anchor Group A&B	Anchor Group C	Anchor Group D	Anchor Group A&B	Anchor Group C	Anchor Group D	Anchor Group A&B	Anchor Group C	Anchor Group D
Door	80	N/A	2	1	2	2	1	3	2	1	N/A	N/A	N/A
SLT/TR	80	1	2	1	2	2	1	3	2	1	3	2	1
Door	96	N/A	2	1	3	2	1	3	3	2	N/A	N/A	N/A
SLT/TR	96	1	2	1	3	2	1	3	3	2	3	3	2

FOR "O|XX|O" AND SIMILAR CONFIGURATIONS CONTAINING A DOUBLE DOOR (XX), USE ONLY HALF OF THE FRAME WIDTH OF THE DOUBLE DOOR WHEN USING THIS TABLE.

TRANSOM-TO-DOOR (X/O) OR TRANSOM-TO-SIDELITE (O/O) MULLION ATTACHMENT& INSTALLATION

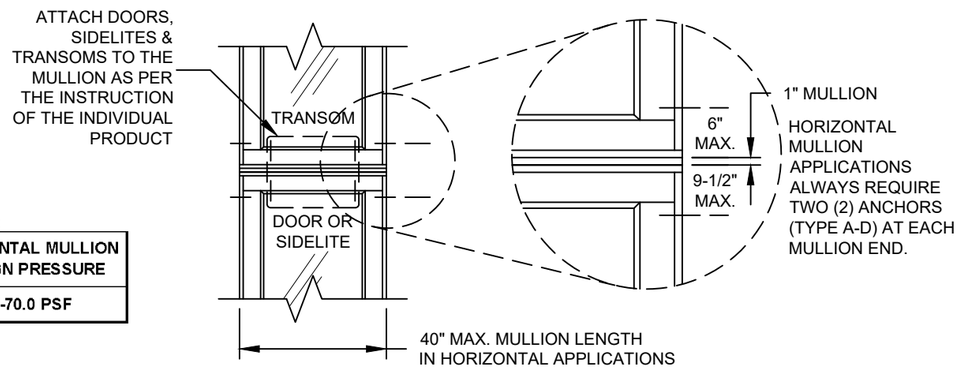

TABLE 7:

HORIZONTAL MULLION DESIGN PRESSURE
+/-70.0 PSF

INSTRUCTIONS:

1) DOOR HINGE JAMBS OF ALL HEIGHTS TO ALWAYS BE ANCHORED WITH SIX ANCHORS. SEE TABLE 1, SHEET 1, FOR ALL APPROVED ANCHORS. FOUR OF THE SIX ANCHORS MUST BE INSTALLED THROUGH THE HINGES, ONE AT EACH HINGE LOCATION (RECOMMENDED #10 FLATHEAD SMS OR 3/16" FLATHEAD ULTRACON FOR EACH HINGE ANCHOR).
2) FOR A MULLED UNIT, DETERMINE THE DESIGN PRESSURE OF EACH COMPONENT IN THAT CONFIGURATION. FOR EXAMPLE, ON AN "X|O" CONFIGURATION, THE DP FOR THE DOOR, THE MULLION AND THE SIDELITE MUST EACH BE DETERMINED. THE LOWEST DP APPLIES TO THE ENTIRE ASSEMBLY.

NOTES:

1) SINGLE DOOR MAY BE LEFT OR RIGHT-HANDED.
2) MULLIONS SHOWN ARE STANDARD 1" FRENCH DOOR MULLIONS.
3) MULLED CONFIGURATIONS NOT SHOWN MAY BE POSSIBLE USING OTHER MULLION TYPES, SEE SEPARATE APPROVAL. THE LOWEST COMPONENT DP IS TO BE THE OVERALL ASSEMBLY DP.
4) FRENCH DOOR MULLION IS LIMITED TO 96" IN VERTICAL APPLICATIONS AND 40" IN HORIZONTAL APPLICATIONS.
5) NARROW OR WIDE STILES AND RAILS MAY BE MIXED WITHIN THE SAME SIDELITE/TRANSOM OR MULLED ASSEMBLY.
6) FOR SIZES NOT SHOWN, ROUND UP TO THE NEXT AVAILABLE SHORT OR LONG DIMENSION.

Revision:

E) NO CHANGES IN THIS SHEET.

PREPARED BY A. LYNN MILLER
1070 TECHNOLOGY DRIVE
N. VENICE, FL 34275
(941) 480-1600

REGISTRATION #29296

PGT Custom Windows and Doors
1070 TECHNOLOGY DRIVE
N. VENICE, FL 34275
(941) 480-1600

Series	Desc.	Sheet	DWG No.	Drawn By	Date	Rev.
FD5555	DP & ANCHORAGE	4 OF 11	FD5555FPA-LM	A. MORLESIN	06/12/11	D

Title: VINYL FRENCH DOOR (LM)

ANTHONY LYNN MILLER
LICENSE
No. 58705
STATE OF FLORIDA
PROFESSIONAL ENGINEER
10/11/23

A. LYNN MILLER, P.E.
P.E.# 58705

SIDELITE/TRANSOM INSTALLATION (O)

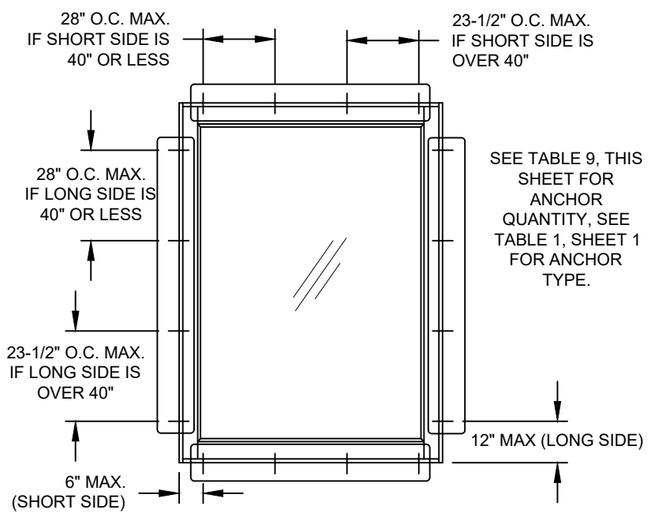

(WIDE STILES AND WIDE RAILS SHOWN ON SIDELITES)

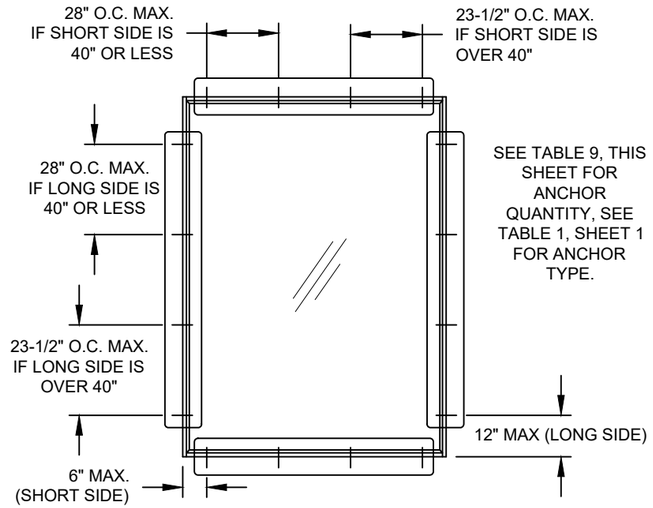

(NARROW STILES AND NARROW RAILS SHOWN ON SIDELITES)

TABLE 8:

WINDOW DESIGN PRESSURE	
+/-70.0 PSF	All Glass Types

NOTES:
1) NARROW OR WIDE STILES AND RAILS MAY BE MIXED WITHIN THE SAME SIDELITE/TRANSOM OR MULLED ASSEMBLY.
2) SIDELITE/TRANSOM MAY BE A SINGLE, STAND-ALONE UNIT.
3) FOR SIZES NOT SHOWN, ROUND UP TO THE NEXT AVAILABLE SHORT OR LONG DIMENSION.

TABLE 9:

Short Side (in)		Sidelite/Transom Anchor Quantity																																	
		Long Side (in)																																	
		63-3/16		66-5/8		68		70		72		76		78		82		84		88		92		96		98		104			108		111	
		Anchor Group A	Anchor Groups B-D	Anchor Group A	Anchor Groups B-D	Anchor Group A	Anchor Groups B-D	Anchor Group A	Anchor Groups B-D	Anchor Group A	Anchor Groups B-D	Anchor Group A	Anchor Groups B-D	Anchor Group A	Anchor Groups B-D	Anchor Group A	Anchor Groups B-D	Anchor Group A	Anchor Groups B-D	Anchor Group A	Anchor Groups B-D	Anchor Group A	Anchor Groups B-D	Anchor Group A	Anchor Groups B-D	Anchor Group A	Anchor Groups B-D	Anchor Group A	Anchor Group B	Anchor Groups C-D	Anchor Group A	Anchor Groups B-D	Anchor Group A	Anchor Groups B-D
24	Short Side	2	2	2	2	2	2	2	2	2	2	2	2	2	2	2	2	2	2	2	2	2	2	2	2	2	2	2	2	2	2	2	2	2	2
	Long Side	4	4	4	4	4	4	4	4	4	4	4	4	4	4	4	4	5	5	5	5	5	5	5	5	5	5	6	5	5	6	6	6	6	6
28	Short Side	2	2	2	2	2	2	2	2	2	2	2	2	2	2	2	2	2	2	2	2	2	2	2	2	2	2	2	2	2	2	2	2	2	2
	Long Side	4	4	4	4	4	4	4	4	4	4	5	4	5	4	5	4	5	5	5	5	6	5	6	5	6	5	6	5	5	7	6	7	6	6
32	Short Side	2	2	2	2	2	2	2	2	2	2	2	2	2	2	2	2	2	2	2	2	2	2	2	2	2	2	2	2	2	2	2	2	2	2
	Long Side	4	4	4	4	4	4	4	4	5	4	5	4	5	4	5	4	6	5	6	5	6	5	6	5	7	5	7	5	5	7	6	8	6	6
36	Short Side	2	2	2	2	2	2	2	2	2	2	2	2	2	2	2	2	2	2	2	2	2	2	2	2	2	2	2	2	2	2	2	2	2	2
	Long Side	4	4	5	4	5	4	5	4	5	4	5	4	5	4	6	4	6	5	6	5	7	5	7	5	7	5	8	5	5	7	6	8	6	6
38-3/4	Short Side	2	2	2	2	2	2	2	2	2	2	2	2	2	2	2	2	2	2	2	2	2	2	2	2	2	2	2	2	2	2	2	2	2	2
	Long Side	4	4	5	4	5	4	5	4	5	4	6	4	6	4	6	4	6	5	7	5	7	5	7	5	8	5	8	5	5	8	6	9	6	6
40	Short Side	2	2	2	2	2	2	2	2	2	2	2	2	2	2	2	2	2	2	2	2	2	2	2	2	2	2	2	2	2	2	2	2	2	2
	Long Side	4	4	5	4	5	4	5	4	5	4	6	4	6	4	6	4	6	5	7	5	7	5	8	5	8	5	8	5	5	9	6	9	6	6

Revision:
E) NO CHANGES IN THIS SHEET.

PREPARED BY A. LYNN MILLER
1070 TECHNOLOGY DRIVE
N. VENICE, FL 34275
(941) 480-1600
REGISTRATION #29296

Date 06/12/11
Drawn By A. MORLESIN
Rev. D
DWG No. FD5555FPA-LM
Sheet 5 OF 11
Series FD5555
Desc. DP & ANCHORAGES
Title VINYL FRENCH DOOR (LM)

PGT Custom Windows and Doors
1070 TECHNOLOGY DRIVE
N. VENICE, FL 34275
(941) 480-1600

ANTHONY LYNN MILLER
LICENSE
No. 58705
10/11/23
STATE OF FLORIDA
PROFESSIONAL ENGINEER

A. LYNN MILLER, P.E.
P.E.# 58705

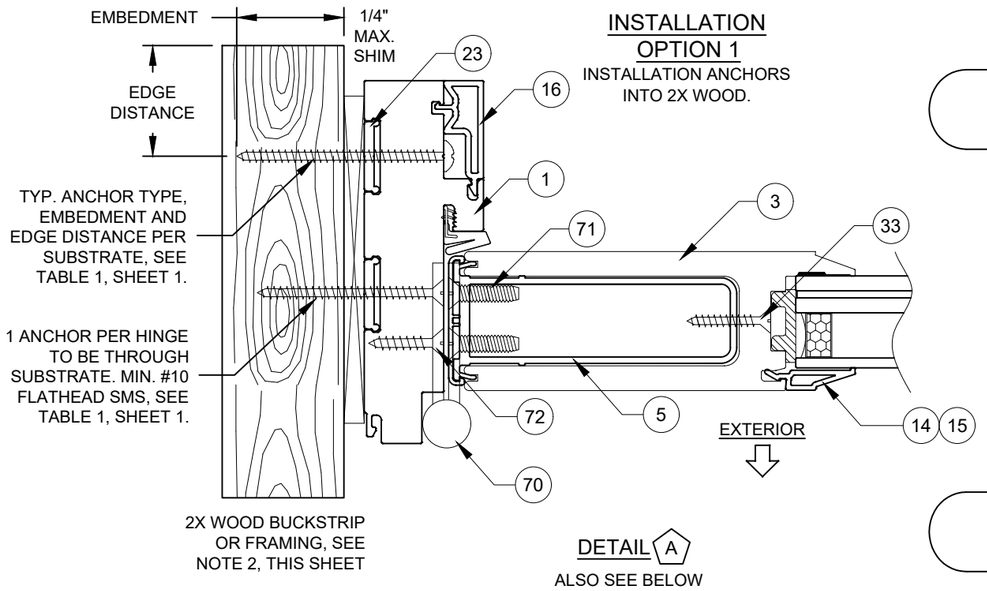

INSTALLATION OPTION 1

INSTALLATION ANCHORS INTO 2X WOOD.

DETAIL A

ALSO SEE BELOW

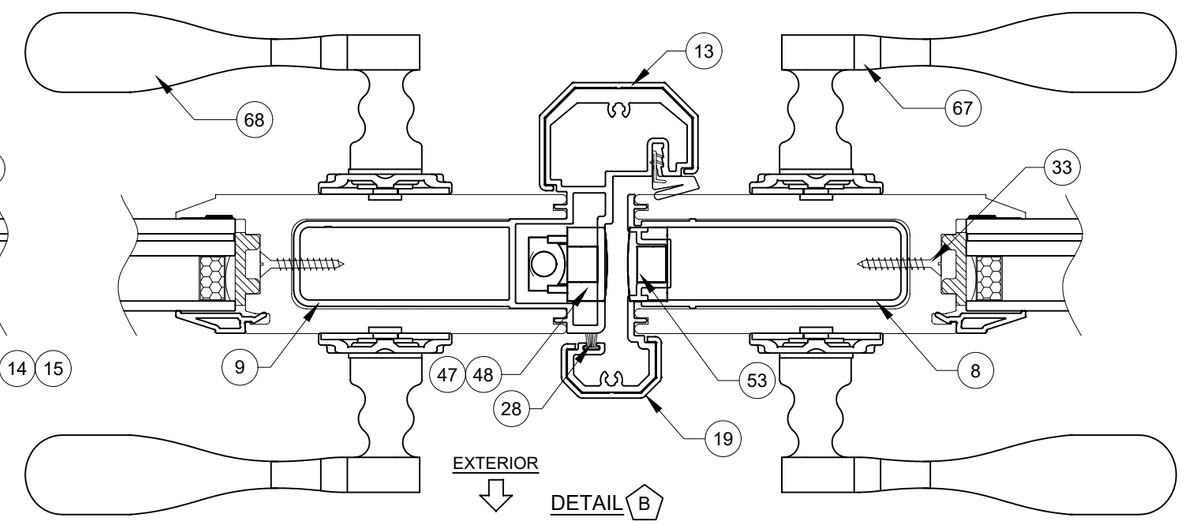

DETAIL B

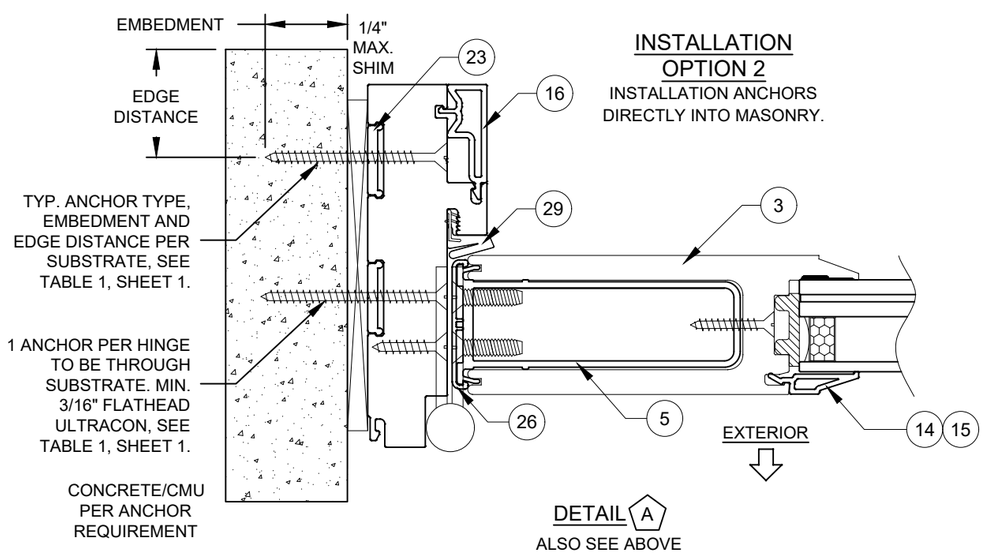

INSTALLATION OPTION 2

INSTALLATION ANCHORS DIRECTLY INTO MASONRY.

DETAIL A

ALSO SEE ABOVE

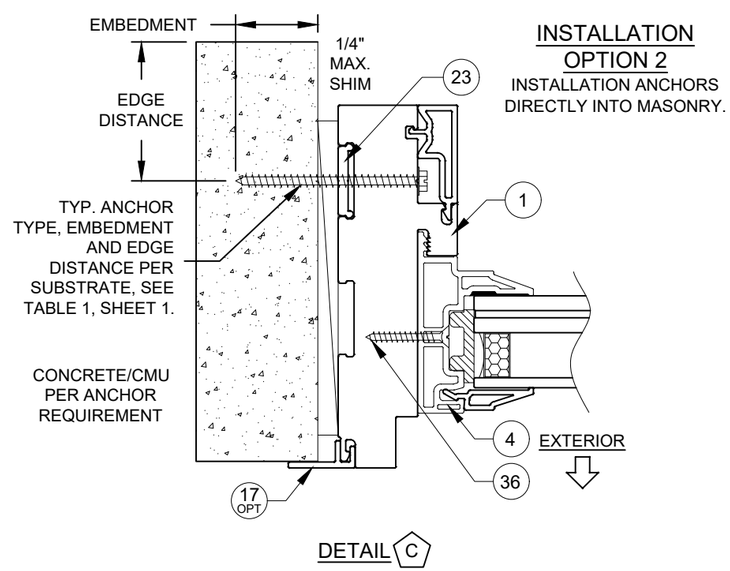

INSTALLATION OPTION 2

INSTALLATION ANCHORS DIRECTLY INTO MASONRY.

DETAIL C

INSTALLATION NOTES:

1) USE ONLY SUBSTRATE-APPROPRIATE ANCHORS LISTED ON TABLE 1, SHEET 1. FOLLOW EMBEDMENT AND EDGE DISTANCE LIMITS. ANY INSTALLATION OPTION SHOWN MAY BE USED ON ANY SIDE OF THE DOOR, SIDELITE OR TRANSOM.
2) WOOD BUCKS DEPICTED ON THIS SHEET AS "1X", ARE BUCKS WHOSE TOTAL THICKNESS IS LESS THAN 1-1/2". 1X WOOD BUCKS ARE OPTIONAL IF UNIT CAN BE INSTALLED DIRECTLY TO MASONRY. WOOD BUCKS DEPICTED AS "2X" ARE 1-1/2" THICK OR GREATER. INSTALLATION TO THE SUBSTRATE OF WOOD BUCKS TO BE ENGINEERED BY OTHERS OR AS APPROVED BY THE AUTHORITY HAVING JURISDICTION.
3) FOR ATTACHMENT TO METAL: THE STRUCTURAL MEMBER SHALL BE OF A SIZE TO PROVIDE FULL SUPPORT TO THE FRAME OF THE DOOR, SIDELITE OR TRANSOM.
4) IF APPLICABLE, LOWEST DESIGN PRESSURE FROM DOOR, SIDELITE, TRANSOM OR MULLION APPLIES TO THE WHOLE SYSTEM.

Revision:

E) NO CHANGES IN THIS SHEET.

PREPARED BY A. LYNN MILLER
1070 TECHNOLOGY DRIVE
N. VENICE, FL 34275
(941) 480-1600

REGISTRATION #29296

PGT Custom Windows and Doors
1070 TECHNOLOGY DRIVE
N. VENICE, FL 34275
(941) 480-1600

Series	Desc.	Title	Sheet	DWG No.	Drawn By	Date	Rev.
FD5555	INSTALLATION DETAILS.	VINYL FRENCH DOOR (LM)	6 OF 11	FD5555FPA-LM	A. MORLESIN	06/12/11	D

ANTHONY LYNN MILLER
LICENSE
No. 58705
A Lynn Miller
10/11/23
STATE OF FLORIDA
PROFESSIONAL ENGINEER

A. LYNN MILLER, P.E.
P.E.# 58705

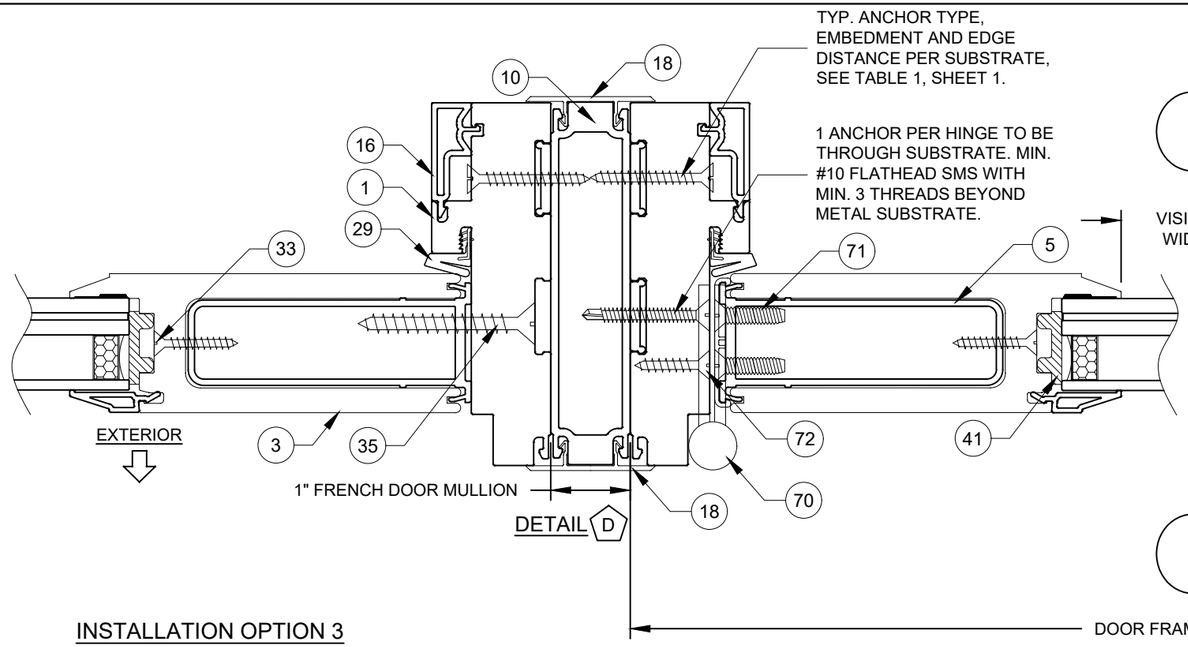

INSTALLATION OPTION 4

INSTALLATION ANCHORS DIRECTLY INTO METAL.

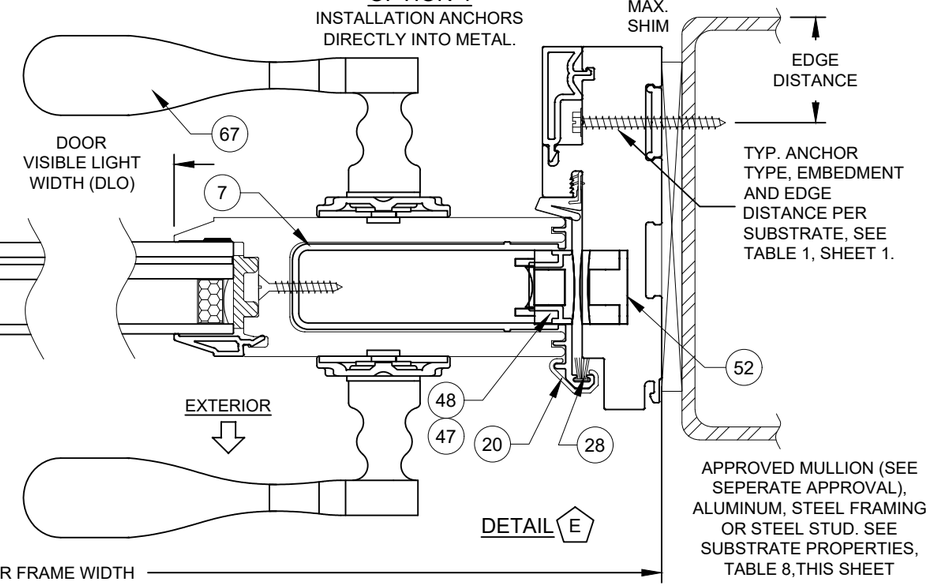

INSTALLATION OPTION 3

INSTALLATION ANCHORS THROUGH 1X BUCKSTRIP INTO MASONRY.

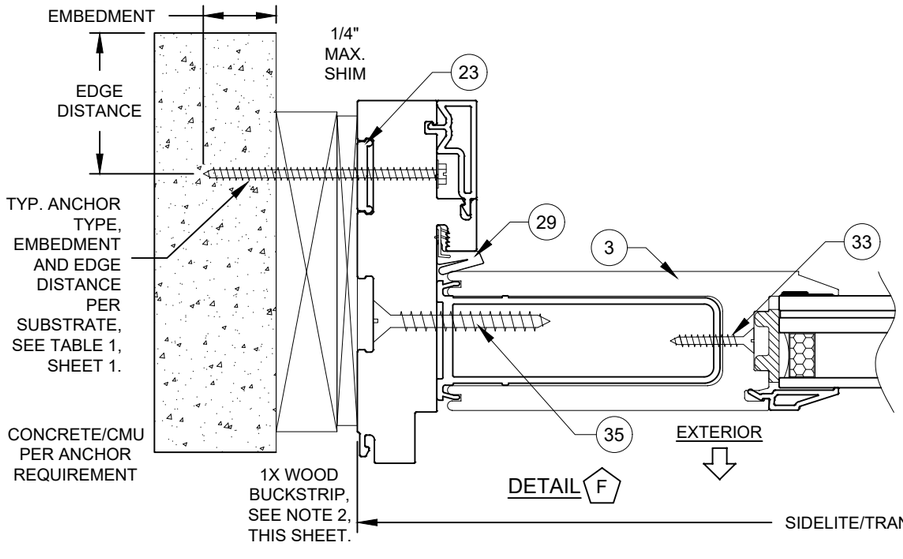

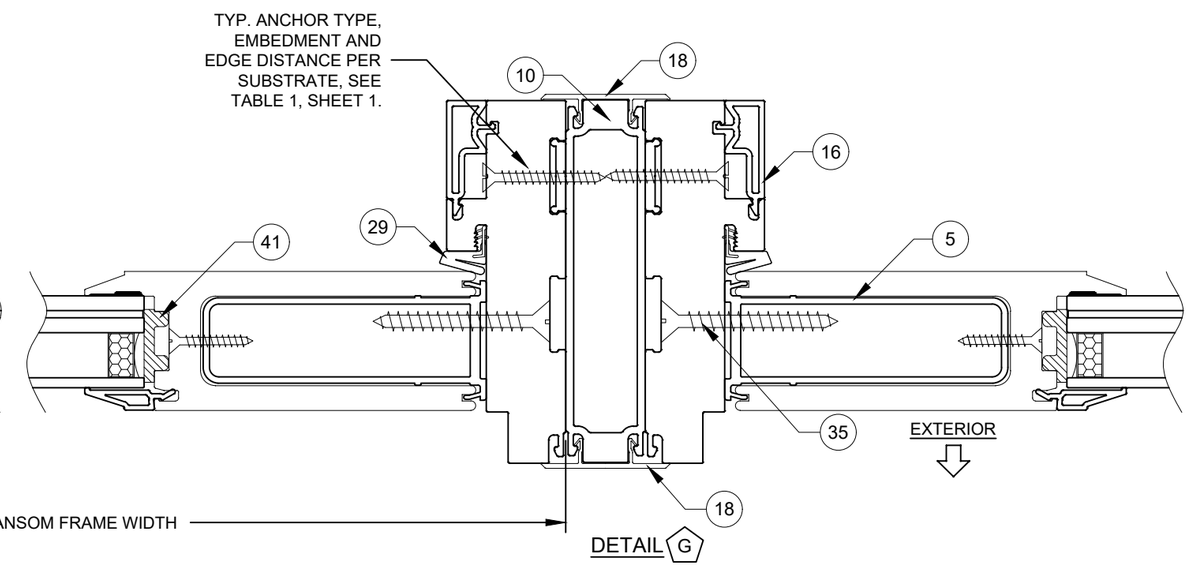

INSTALLATION NOTES:

1) USE ONLY SUBSTRATE-APPROPRIATE ANCHORS LISTED ON TABLE 1, SHEET 1. FOLLOW EMBEDMENT AND EDGE DISTANCE LIMITS. ANY INSTALLATION OPTION SHOWN MAY BE USED ON ANY SIDE OF THE DOOR, SIDELITE OR TRANSOM.
2) WOOD BUCKS DEPICTED ON THIS SHEET AS "1X", ARE BUCKS WHOSE TOTAL THICKNESS IS LESS THAN 1-1/2". 1X WOOD BUCKS ARE OPTIONAL IF UNIT CAN BE INSTALLED DIRECTLY TO MASONRY. WOOD BUCKS DEPICTED AS "2X" ARE 1-1/2" THICK OR GREATER. INSTALLATION TO THE SUBSTRATE OF WOOD BUCKS TO BE ENGINEERED BY OTHERS OR AS APPROVED BY THE AUTHORITY HAVING JURISDICTION.
3) FOR ATTACHMENT TO METAL: THE STRUCTURAL MEMBER SHALL BE OF A SIZE TO PROVIDE FULL SUPPORT TO THE FRAME OF THE DOOR, SIDELITE OR TRANSOM.
4) IF APPLICABLE, LOWEST DESIGN PRESSURE FROM DOOR, SIDELITE, TRANSOM OR MULLION APPLIES TO THE WHOLE SYSTEM.

Revision:
E) NO CHANGES IN THIS SHEET.

PREPARED BY A. LYNN MILLER
1070 TECHNOLOGY DRIVE
N. VENICE, FL 34275
(941) 480-1600
REGISTRATION #29296

PGT Custom Windows and Doors
1070 TECHNOLOGY DRIVE
N. VENICE, FL 34275
(941) 480-1600

Series	Desc.	Sheet	DWG No.	Drawn By	Date	Rev.
FD5555	INSTALLATION DETAILS.	7 OF 11	FD5555FPA-LM	A. MORLESIN	06/12/11	D

Title: VINYL FRENCH DOOR (LM)

ANTHONY LYNN MILLER
LICENSE
No. 58705
STATE OF FLORIDA
PROFESSIONAL ENGINEER
10/11/23

A. LYNN MILLER, P.E.
P.E.# 58705

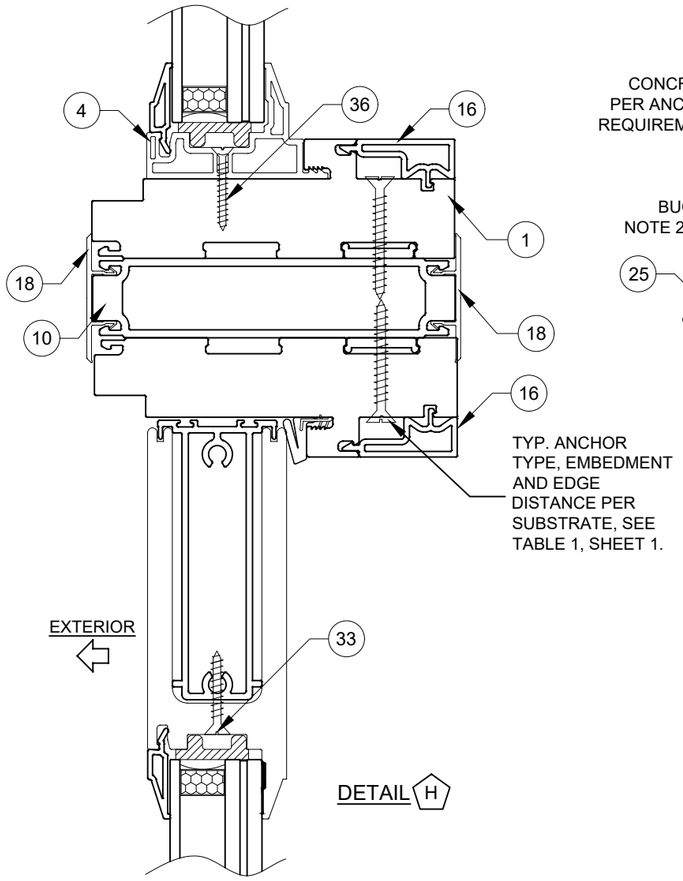

INSTALLATION OPTION 3

INSTALLATION ANCHORS THROUGH 1X BUCKSTRIP INTO MASONRY.

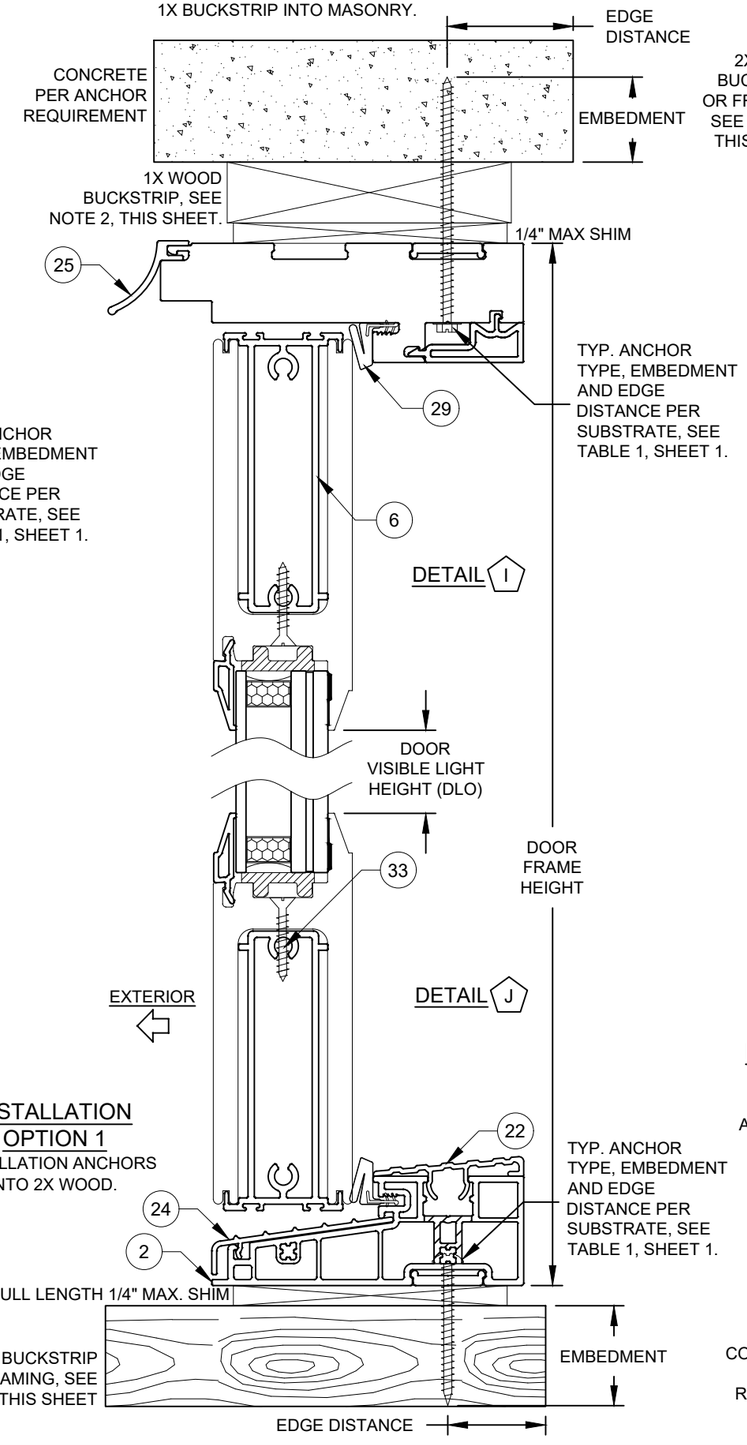

INSTALLATION OPTION 1

INSTALLATION ANCHORS INTO 2X WOOD.

INSTALLATION OPTION 5

INSTALLATION ANCHORS THROUGH 1X BUCKSTRIP INTO 2X WOOD.

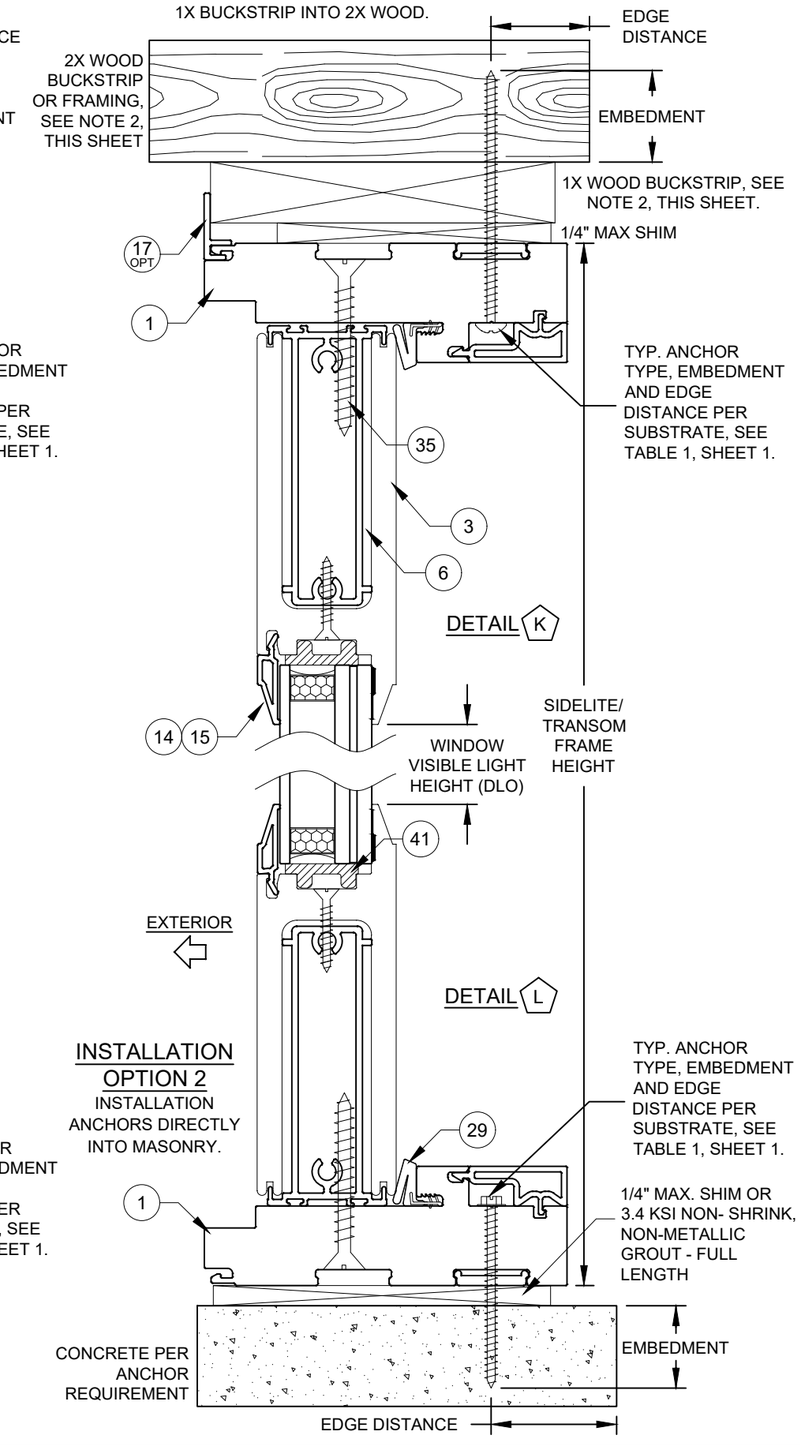

INSTALLATION OPTION 2

INSTALLATION ANCHORS DIRECTLY INTO MASONRY.

INSTALLATION NOTES:

1) USE ONLY SUBSTRATE-APPROPRIATE ANCHORS LISTED ON TABLE 1, SHEET 1. FOLLOW EMBEDMENT AND EDGE DISTANCE LIMITS. ANY INSTALLATION OPTION SHOWN MAY BE USED ON ANY SIDE OF THE DOOR, SIDELITE OR TRANSOM.

2) WOOD BUCKS DEPICTED ON THIS SHEET AS "1X", ARE BUCKS WHOSE TOTAL THICKNESS IS LESS THAN 1-1/2". 1X WOOD BUCKS ARE OPTIONAL IF UNIT CAN BE INSTALLED DIRECTLY TO MASONRY. WOOD BUCKS DEPICTED AS "2X" ARE 1-1/2" THICK OR GREATER. INSTALLATION TO THE SUBSTRATE OF WOOD BUCKS TO BE ENGINEERED BY OTHERS OR AS APPROVED BY THE AUTHORITY HAVING JURISDICTION.

3) FOR ATTACHMENT TO METAL: THE STRUCTURAL MEMBER SHALL BE OF A SIZE TO PROVIDE FULL SUPPORT TO THE FRAME OF THE DOOR, SIDELITE OR TRANSOM.

4) IF APPLICABLE, LOWEST DESIGN PRESSURE FROM DOOR, SIDELITE, TRANSOM OR MULLION APPLIES TO THE WHOLE SYSTEM.

Revision:

E) NO CHANGES IN THIS SHEET.

PREPARED BY A. LYNN MILLER
1070 TECHNOLOGY DRIVE
N. VENICE, FL 34275
(941) 480-1600

REGISTRATION #29296

PGT Custom Windows and Doors
1070 TECHNOLOGY DRIVE
N. VENICE, FL 34275
(941) 480-1600

Series	Desc.	Title	Sheet	DWG No.	Drawn By	Date	Rev.
FD5555	INSTALLATION DETAILS.	VINYL FRENCH DOOR (LM)	8 OF 11	FD5555FPA-LM	A. MORLESIN	06/12/11	D

ANTHONY LYNN MILLER
LICENSE
No. 58705
STATE OF FLORIDA
PROFESSIONAL ENGINEER
10/11/23

A. LYNN MILLER, P.E.
P.E.# 58705

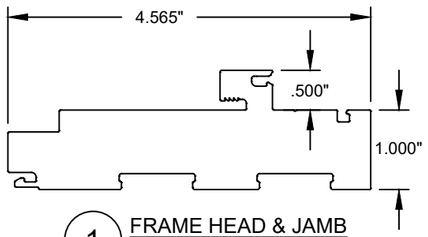

1 FRAME HEAD & JAMB
#20000, Cellular PVC

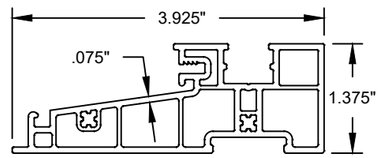

2 FRAME SILL
#20001, Rigid PVC

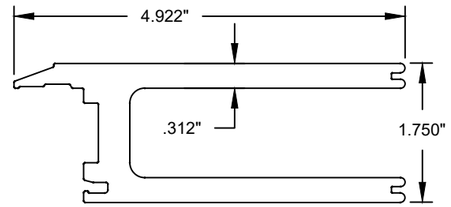

3 PANEL RAIL & STILE
#20002, Cellular PVC

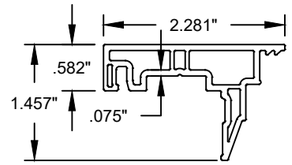

4 SIDELITE ADAPTER
#20003, Rigid PVC

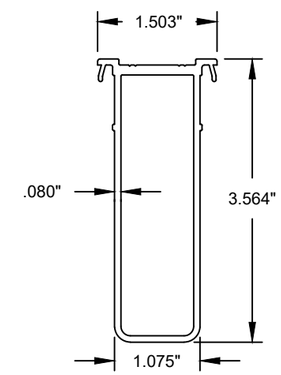

5 HINGE STILE REINFORCEMENT
#20013, 6063-T6

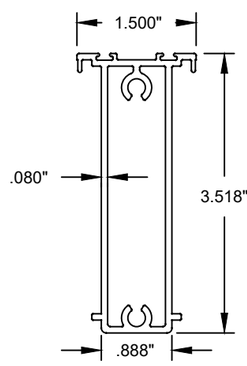

6 TOP & BOTTOM RAIL REINFORCEMENT
#20014, 6063-T6

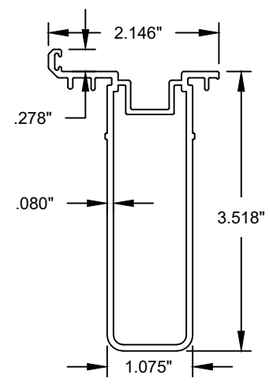

7 PANEL STILE REINFORCEMENT
#20015, 6063-T6

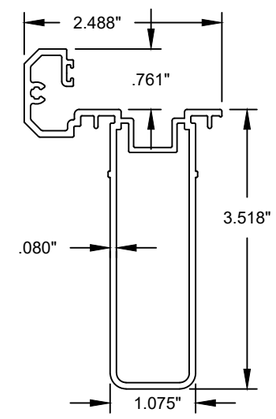

8 ACTIVE ASTRAGAL
#20016, 6063-T6

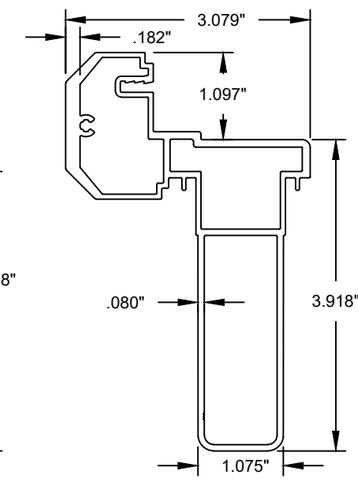

9 INACTIVE ASTRAGAL
#20017, 6063-T6

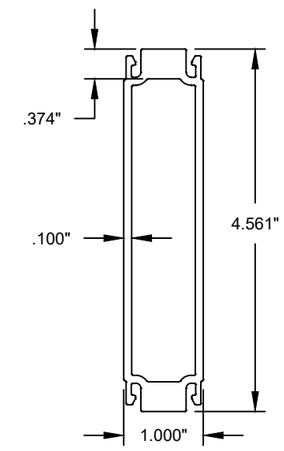

10 1" FRENCH DOOR MULLION
#20022, 6063-T6

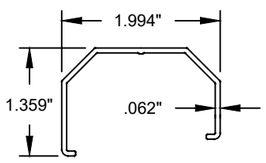

13 INACTIVE ASTRAGAL COVER
#20004, Rigid PVC

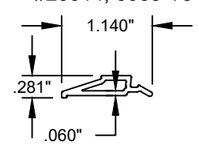

14 BEVELED BEAD
#20005, Rigid PVC

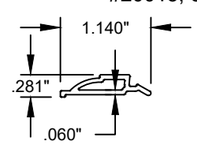

15 OGEE BEAD
#20006, Rigid PVC

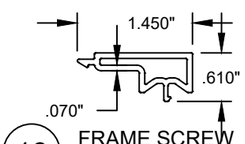

16 FRAME SCREW COVER
#20007, Rigid PVC

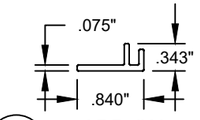

17 ADD-ON FIN/FLANGE
#20008, Rigid PVC

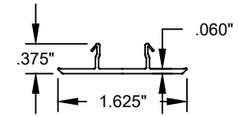

18 1" MULLION CAP
#20009, Rigid PVC

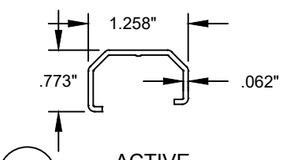

19 ACTIVE ASTRAGAL COVER
#20011, Rigid PVC

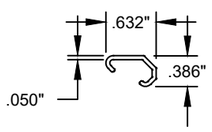

20 SINGLE DOOR ASTRAGAL COVER
#20012, Rigid PVC

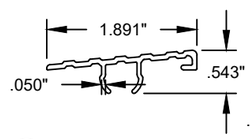

22 SILL SCREW CAP
#20057A, 6063-T6

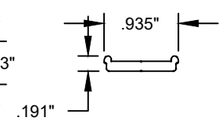

23 ANCHOR PLATE
#19031, 6063-T6

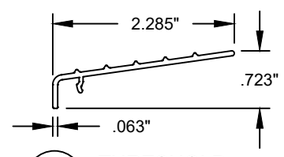

24 THRESHOLD CAP
#20020, 6063-T6

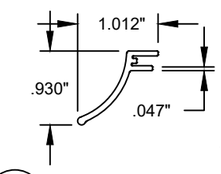

25 DRIP CAP
#20021, RIGID PVC

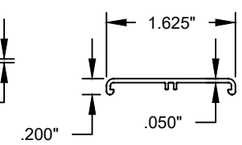

26 HINGE TRIM COVER
#20023, Rigid PVC

Revision:

E) NO CHANGES IN THIS SHEET.

PREPARED BY A. LYNN MILLER
1070 TECHNOLOGY DRIVE
N. VENICE, FL 34275
(941) 480-1600

REGISTRATION #29296

PGT Custom Windows and Doors
1070 TECHNOLOGY DRIVE
N. VENICE, FL 34275
(941) 480-1600

Series	Desc.	Title	Sheet	DWG No.	Drawn By	Date	Rev.
FD5555	EXTRUSIONS.	VINYL FRENCH DOOR (LM)	9 OF 11	FD5555FPA-LM	A. MORLESIN	06/12/11	D

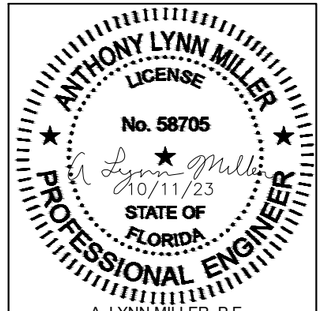

A. LYNN MILLER, P.E.
P.E.# 58705

TABLE 10:

#	PGT Part #	Description	Material
1	20000	Door & Sidelite/Transom Main Frame	Cellular PVC
2	20001	Door Frame Sill	Rigid PVC
3	20002	Panel Stile & Rail	Cellular PVC
4	20003	Sidelite Adapter	Rigid PVC
5	20013	Hinge Stile Reinforcement	Alum., 6063-T6
6	20014	Panel Rail Reinforcement	Alum., 6063-T6
7	20015	Panel Stile Reinforcement	Alum., 6063-T6
8	20016	Active Astragal	Alum., 6063-T6
9	20017	Inactive Astragal	Alum., 6063-T6
10	20022	1" French Door Mullion	Alum., 6063-T6
13	20004	Inactive Astragal Cover	Rigid PVC
14	20005	1-1/16" Bevel Bead	Rigid PVC
15	20006	1-1/16" Ogee Bead	Rigid PVC
16	20007	Screw Cover	Rigid PVC
17	20008	Add-on Fin/Flange	Rigid PVC
18	20009	1" Mullion Cap	Rigid PVC
19	20011	Active Astragal Cover	Rigid PVC
20	20012	Single Door Astragal Cover	Rigid PVC
22	20057A	Sill Screw Cover	Rigid PVC
23	19031	Anchor Plate	Alum., 6063-T6
24	20020	Threshold Cover	Alum., 6063-T6
25	20021	Drip Cap	Rigid PVC
26	20023	Hinge Trim Cover	Rigid PVC
28		Fin Weatherstrip	
29	1671/3	Frame Weatherstrip	
31	714FPT410XW	Frame-to-Wide Slab Screw: #14 X 1-1/2" Phil. FH	Stainless Steel
32	7S101X	Frame-to-Narrow Slab Screw: #10 X 1" Phil. FH	Stainless Steel
33	78X1FPT410	Reinforcement Screw: #8 X 1" Phil. FH	Stainless Steel
34	710X2FPAX	Frame Assembly Screw: #10 X 2" Phil. FH	Stainless Steel
35	714FPT410XW	W-W Slab Assembly Screw: #14 X 1-1/2" Phil. FH	Stainless Steel
36	7S101X	N-N Slab Assembly Screw: #10 X 1" Phil. FH	Stainless Steel
37	71420X2.25	N-W Slab Assembly Screw: #14 X 2-1/4" Phil. FH	Stainless Steel
39		DuraSeal Spacer	
40	62689	SuperSpacer	
41	720026	Setting Block, (Duro.=85 +/- 5)	EPDM
42		Backbedding: Dow-791, 983, 995 or GE-7700	Silicone
43		Argon Gas	
44	6HL5140	Hot Melt Butyl	
47 - 73 see Hardware BOM, Table 9, Sheet 12			
90	20033	Inactive Astragal Cap	Acetal
91	20035	Active Astragal Cap	Acetal

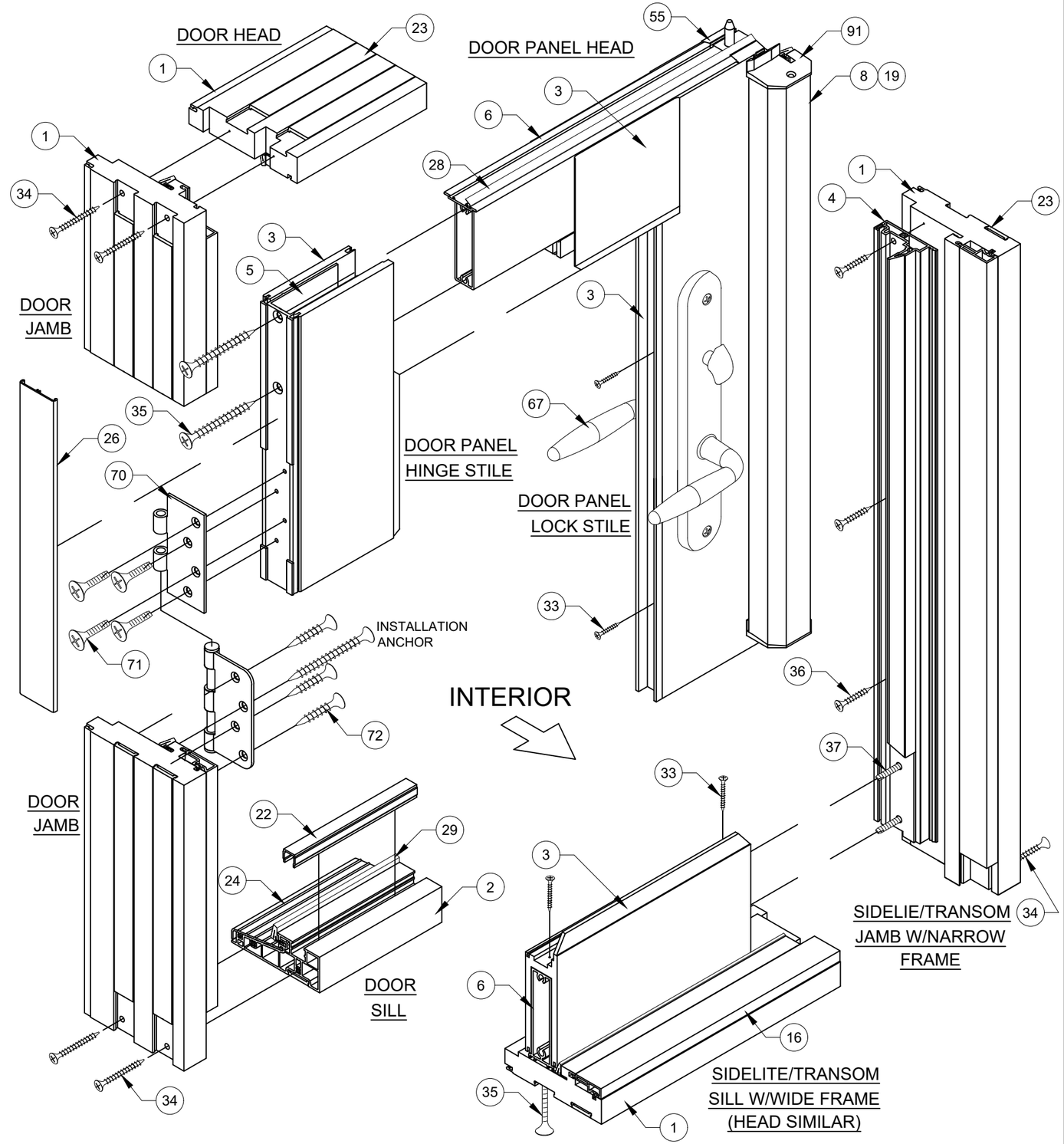

DAYLITE OPENING (DLO) SIZES

WHEN USING PART # 3: (WIDE RAILS OR STILES)
X DOOR FRAME HEIGHT- 12.1 = DLO HEIGHT
X DOOR FRAME WIDTH - 12.3 = DLO WIDTH
(XX DOOR FRAME HEIGHT) - 12.1 = DLO HEIGHT
(XX DOOR FRAME WIDTH / 2) - 11.5 = DLO WIDTH
SLT/TR FRAME HEIGHT- 12.1 = DLO HEIGHT
SLT/TR FRAME WIDTH - 12.1 = DLO WIDTH

WHEN USING PART # 4: (NARROW RAILS OR STILES)
SLT/TR FRAME HEIGHT- 4.9 = DLO HEIGHT
SLT/TR FRAME WIDTH - 4.9 = DLO WIDTH

Revision:
E) NO CHANGES IN THIS SHEET.

PREPARED BY A. LYNN MILLER
1070 TECHNOLOGY DRIVE
N. VENICE, FL 34275
(941) 480-1600
REGISTRATION #29296

PGT Custom Windows and Doors
1070 TECHNOLOGY DRIVE
N. VENICE, FL 34275
(941) 480-1600

Series	Sheet	DWG No.	Rev.
FD5555	10 OF 11	FD5555FPA-LM	D

Title	Desc.	Drawn By	Date
VINYL FRENCH DOOR (LM)	BOM & ASSEMBLY DETAILS.	A. MORLESIN	06/12/11

ANTHONY LYNN MILLER
LICENSE
No. 58705
A. Lynn Miller
10/11/23
STATE OF FLORIDA
PROFESSIONAL ENGINEER

A. LYNN MILLER, P.E.
P.E.# 58705

HARDWARE DETAILS & LOCATIONS

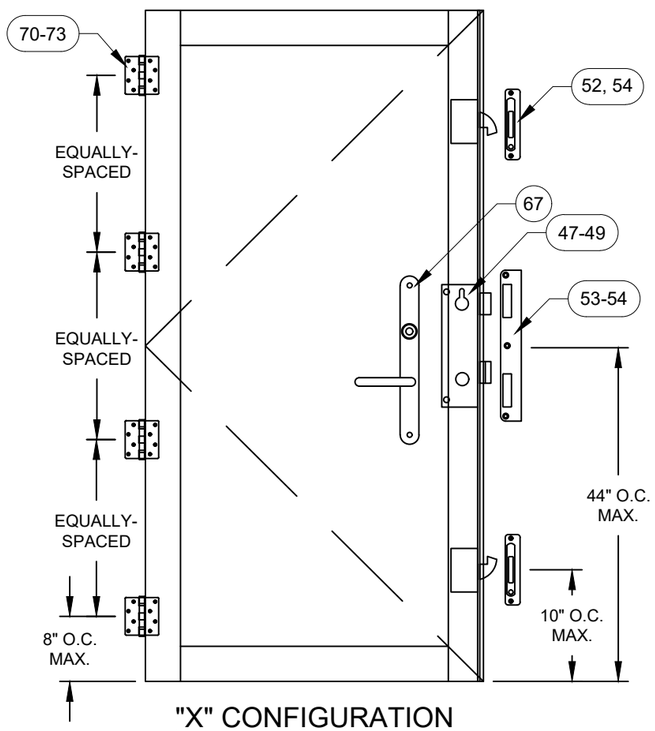

"X" CONFIGURATION

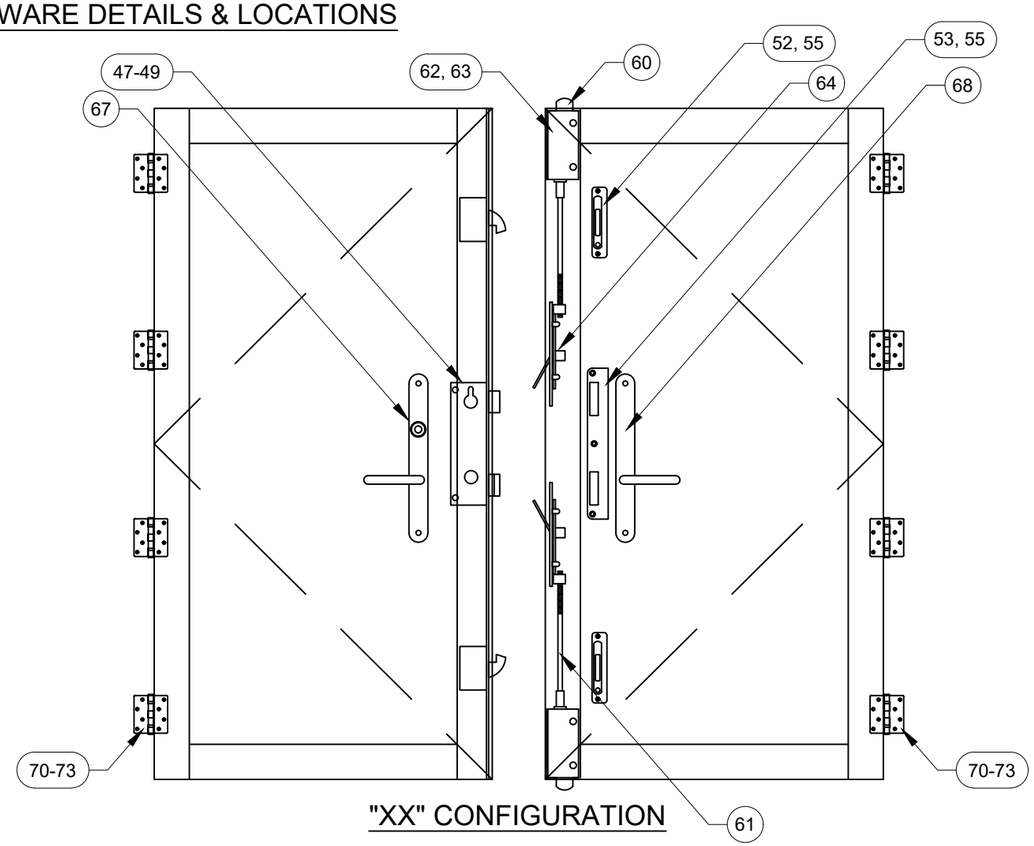

"XX" CONFIGURATION

TABLE 11:

#	PGT Part #	Description	Material
47	666032701	P3000 3-PT Rhino Lock (6'8")	
48	666032702	P3000 3-PT Rhino Lock (over 6'8")	
49	71032X1FPFX	Rhino Lock Screw: 10-32 X 1" Phil. FH	
52	20027	Adjustable Strike Plate Assembly	Stainless Steel
53	20028	Center Strike Plate Assembly	Stainless Steel
54	7S101X	Strike Plate Screw, (X): #10 X 1" Phil. FH	410 S.S.
55	78X12PFHUX	Strike Plate Screw, (XX): #8 X 1/2" Phil. FH	410 S.S.
60	7SB1202	Flush Bolt (XX)	
61	7803725	Flush Bolt Rod (XX)	
62	420034	Flush Bolt Guides (XX)	
63	7832X12FPXP	Flush Bolt Screw: 8-32 X 1/2" Phil. FH	
64	48033N	Guide Pin (XX)	
65	78036	Flush Bolt Strike Plate (XX)	Stainless Steel
66	7832X12FPXP	Flush Bolt Strike Plate Screw, (XX): #8 X 3/4" Phil. FH	410 S.S.
67	varies	Handle/Lever	
68	varies	Dummy Handle/Lever	
70	20025	Butt Hinge	Stainless Steel
71	71032X1FPFX	Hinge, Slab Screw: #10-32 X 1" Phil FH	Stainless Steel
72	7S101X	Hinge, Frame Screw: #10 X 1" Phil. FH	Stainless Steel

HINGE DETAIL:

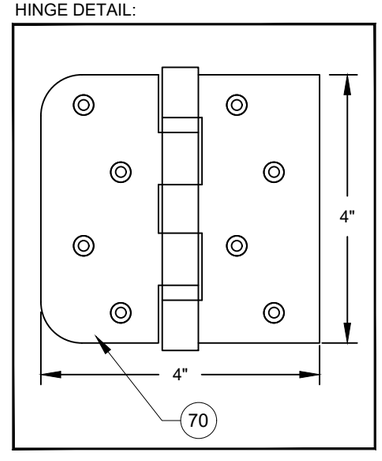

Revision:

E) NO CHANGES IN THIS SHEET.

PREPARED BY A. LYNN MILLER
1070 TECHNOLOGY DRIVE
N. VENICE, FL 34275
(941) 480-1600

REGISTRATION #29296

PGT Custom Windows and Doors
1070 TECHNOLOGY DRIVE
N. VENICE, FL 34275
(941) 480-1600

Series	Desc.	Title	Sheet	DWG No.	Rev.
FD5555	HARDWARE.	VINYL FRENCH DOOR (LM)	11 OF 11	FD5555FPA-LM	D

Drawn By: A. MORLESIN
Date: 06/12/11

ANTHONY LYNN MILLER
LICENSE
No. 58705
10/11/23
STATE OF FLORIDA
PROFESSIONAL ENGINEER

A. LYNN MILLER, P.E.
P.E.# 58705